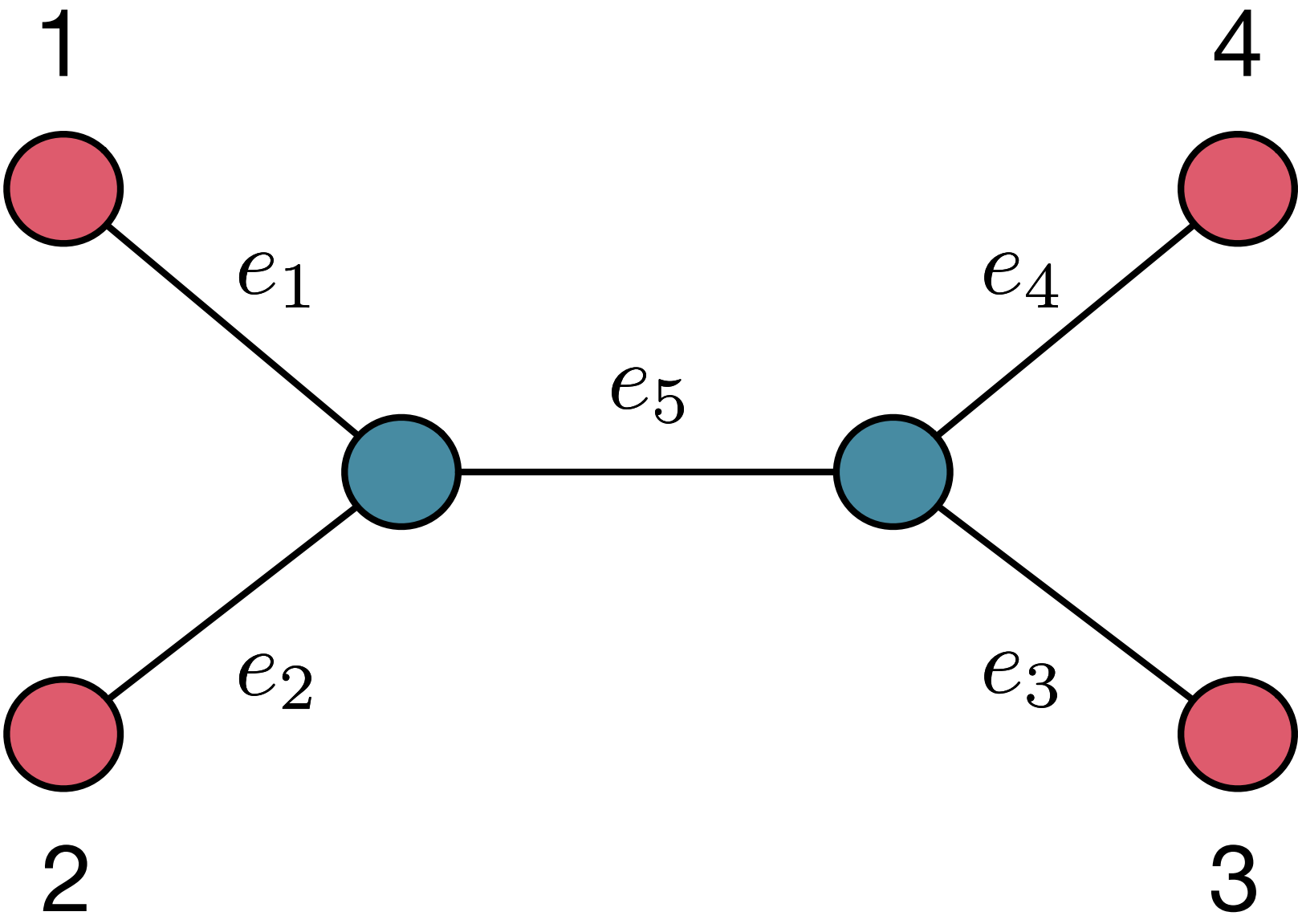
1
4
e_1
e_4
e_5
e_2
e_3
2
3